MEDALLION-LOK

VALLEY DETAIL

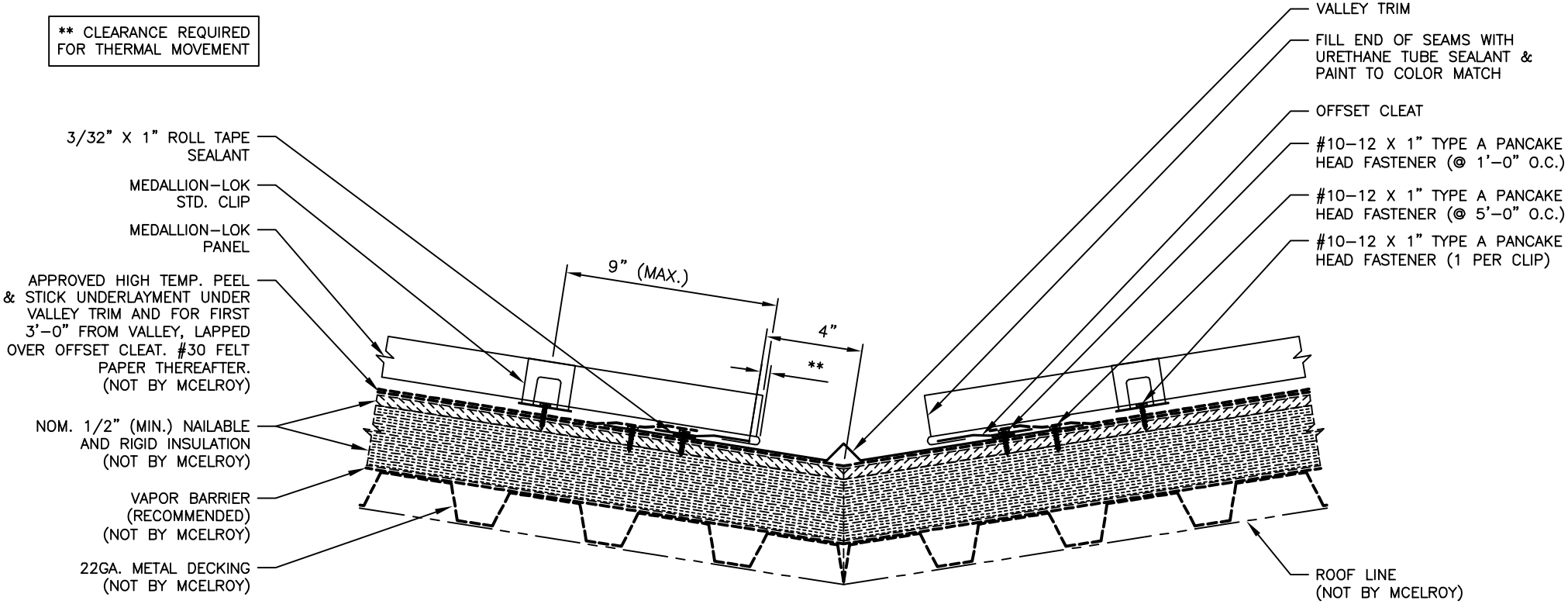

McELROY METAL, INC.

DATE CREATED: 06/30/08