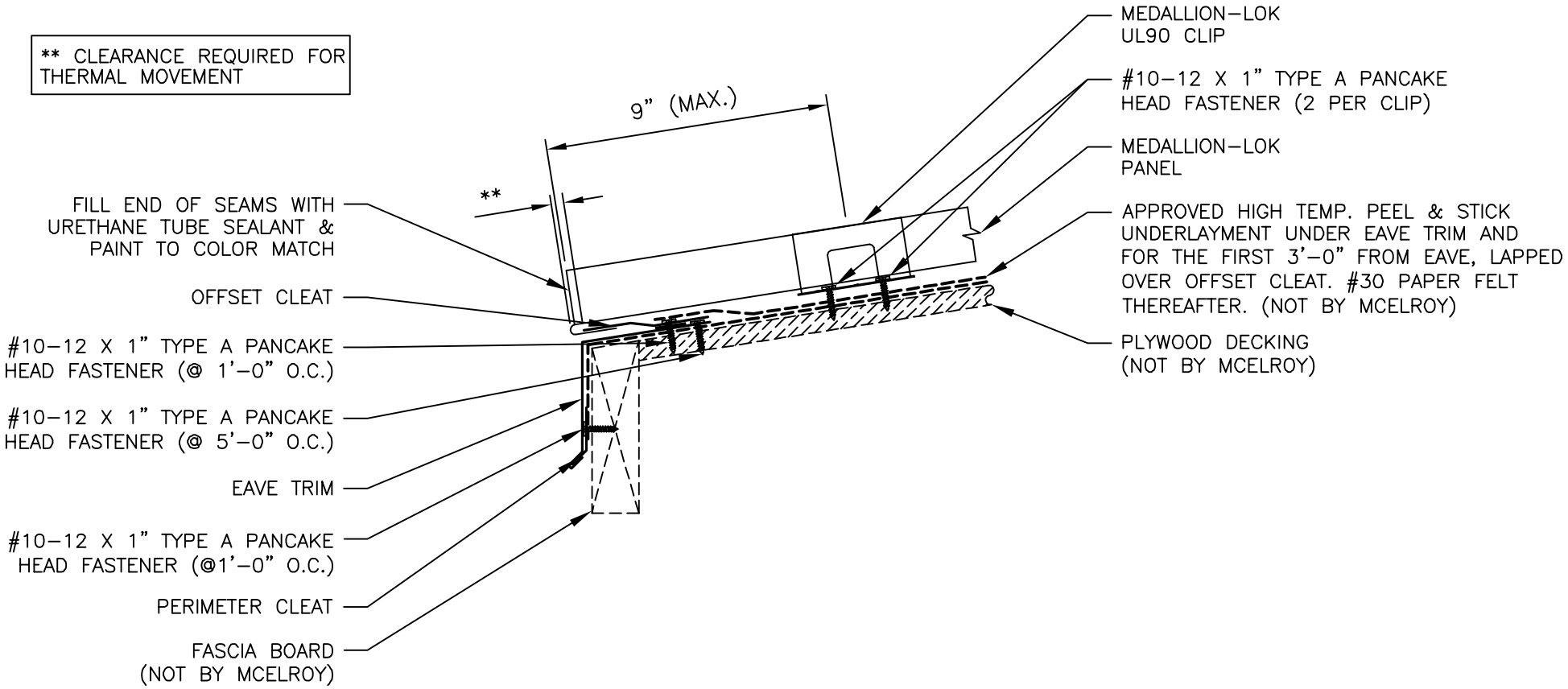EAVE w/o GUTTER DETAIL